RIVETNUT TECHNOLOGY SYSTEMS LIMITED

HFCI-CD316 IN STAINLESS STEEL

TECHNICAL DATA SHEET

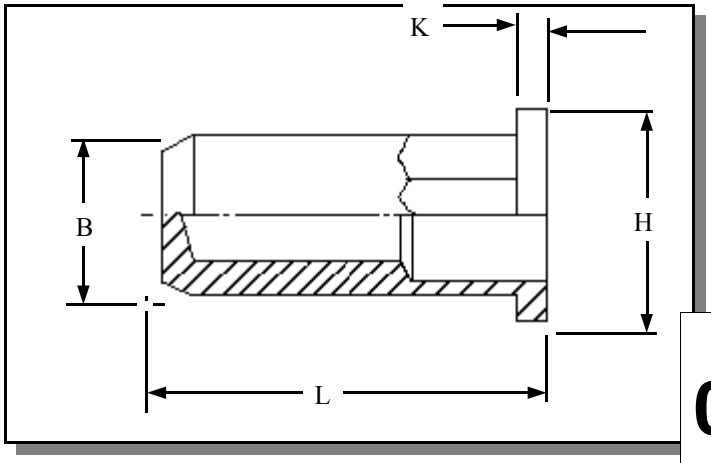

Hexagon flat head closed ended Rivetnuts for material up to 3.00 mm thick

All dimensions in mm
Material :- 316 Stainless Steel
Finish :- Self colour

R.T.S. SALES LINE
01296 330331

THREAD SIZE	GRIP RANGE	HOLE SIZE A/F -0.0 +0.10	BODY A/F "B"	HEAD DIA "H" ± 0.10	LENGTH "L"	"K"	PART NUMBER
M4	0.50 to 2.00	6.10	6.00	9.00	15.00	1.00	HFCI-04020-CD316
M5	0.50 to 3.00	7.10	7.00	10.00	17.50	1.00	HFCI-05030-CD316
M6	0.50 to 3.00	9.10	9.00	12.00	21.50	1.50	HFCI-06030-CD316
M8	0.50 to 3.00	11.10	11.00	15.00	23.50	1.50	HFCI-08030-CD316

For additional information and technical support please contact R.T.S. technical sales department . R.T.S. reserve the right to change specifications at any time . Information given is for guidance only and should not be used for specific design criteria without reference to our application engineers.